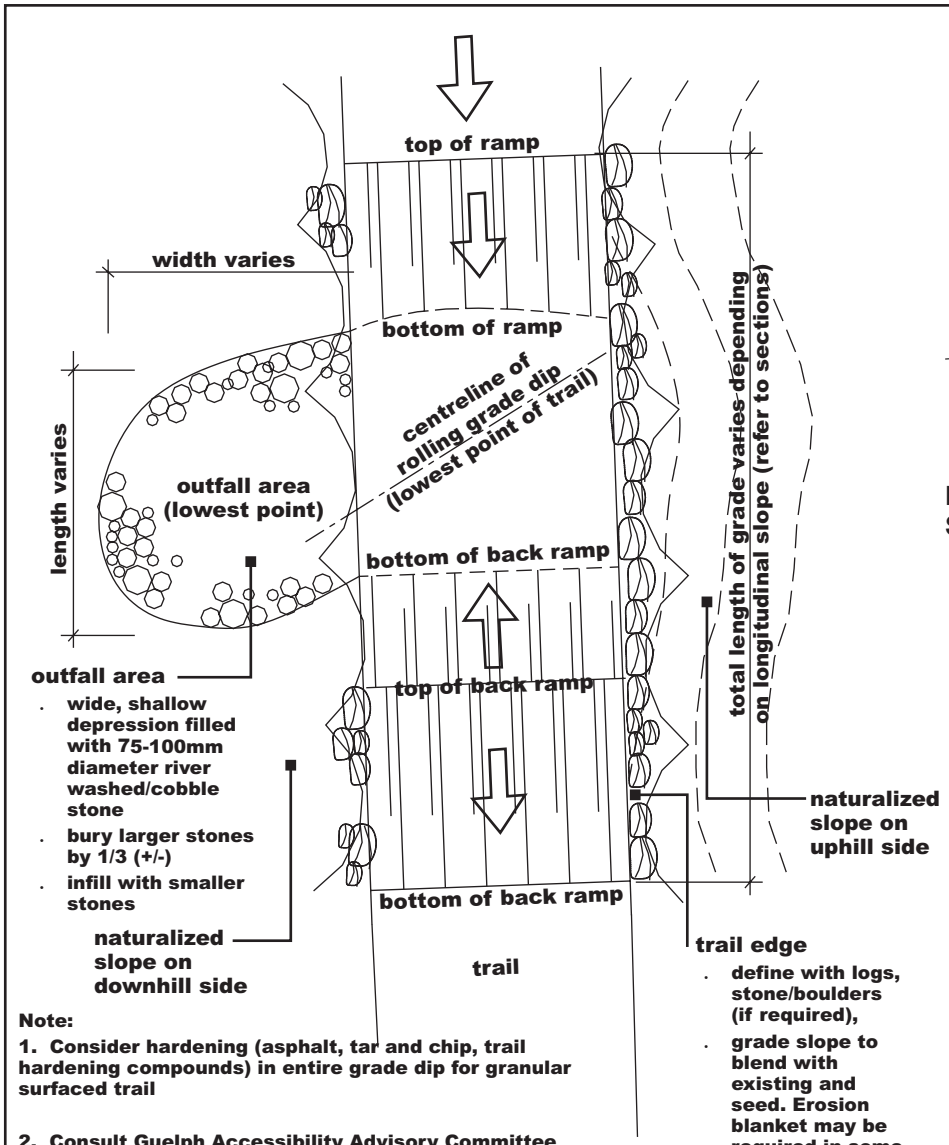

Note:

1. Consider hardening (asphalt, tar and chip, trail hardening compounds) in entire grade dip for granular surfaced trail

2. Consult Guelph Accessibility Advisory Committee regarding locations where rolling grade dips are being considered to determine if alternative solutions may be feasible and/or to ensure that advance warning signs are installed to inform persons with mobility assisted devices

NOT TO SCALE

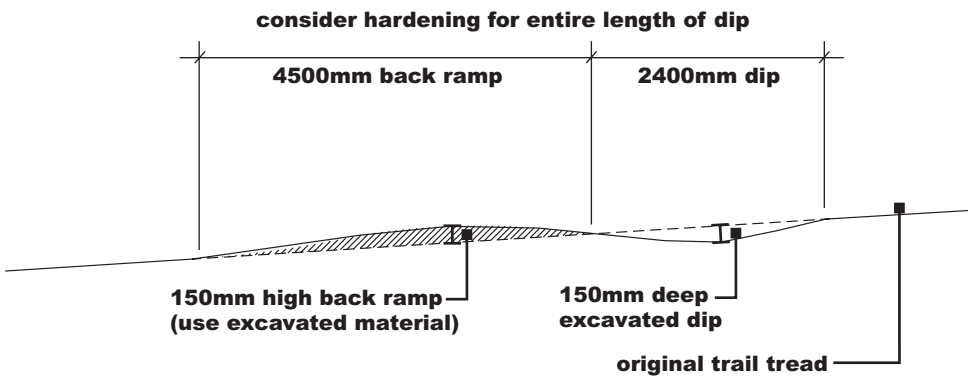

Longitudinal Section (for slopes up to 12%)

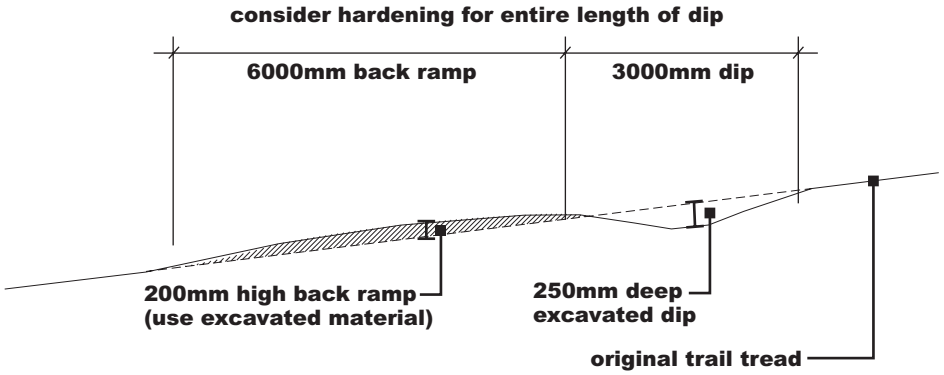

Longitudinal Section (for slopes greater than 12%)

FILE: G3285\Report\Figures\Figure 5-21.CDR

Fig. 5-21 *Rolling Grade Dip*

Stantec

Marshall Macklin Monaghan
CONSULTING ENGINEERS • SURVEYORS • PLANNERS

City of Guelph